We connect and protect

EuropacPRO 19" Subrack Kit for Backplane, Shielded, 3 U, 235 mm

KATALOGOVÉ ČÍSLO

24563-142

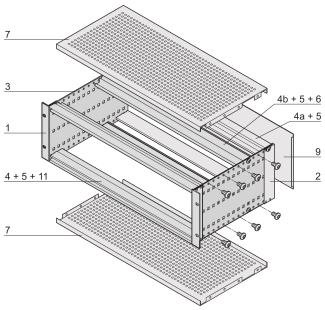

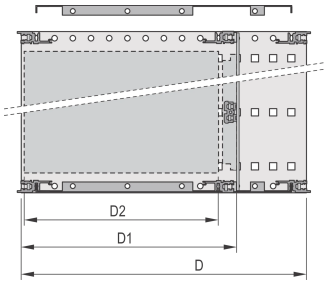

EMC Shielded subrack for backplane mounting, rear side covered by a rear panel.

CERTIFICATIONS

RoHS COMPLIANT

VLASTNOSTI

Subrack with side panel type F ("flexible"), front 19" bracket included, depth-adjustable 19" bracket sold separately (not included in items delivered)

Supplied as space-saving flat-pack

Modifications such as cutouts, different finishes or dimensions available

EMC of approximately 40 dB at 1 GHz, 30 dB at 2 GHz, assuming that the front is covered with shielded front panels, testing in accordance with VG 95373 part 15

IP 20, in accordance with IEC 60529

Aluminum construction

Internal and external dimensions in accordance with: IEC 60297-3-100, -101, IEEE 1101.1

Rear horizontal rail for backplane mounting with insulation strip

Horizontal rail type "light"

VLASTNOSTI PRODUKTU

Rack Height: 3U

Hloubka (D): 235mm

Množství v balení: 1

For Mounting: Backplane

Board Depth: 160mm; 220mm

Gasket Type: Textile EMC

Rukojeť v ceně: No

Mounting: Rack

Complies With: IEC 60297-3-103

EMC Shielding: Yes

Povrchová úprava: Anodized; Passivated

Materiál: Hliník

Product Type: Subrack/Chassis

Rack Width: 84HP

Static Load: 11kg

Net Weight: 2.63kg

DALŠÍ PODROBNOSTI O PRODUKTU

Individual configuration: broad range of variants in height, width and depth; guide rails for a wide variety of applications; interior options; accessories and mounting material.

DIAGRAMS

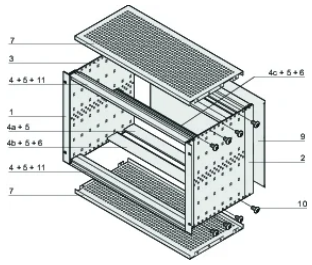

UPOZORNĚNÍ

Produkty nVent musí být instalovány a používány pouze tak, jak je uvedeno v instrukčních listech a materiálech pro školení nVent. Instrukční listy jsou k dispozici na www.nvent.com a od vašeho zástupce zákaznického servisu nVent. Nesprávná instalace, zneužití, nesprávné použití nebo jiný nedostatek úplného dodržování pokynů a varování nVent může způsobit selhání produktu, poškození majetku, vážné zranění osob a smrt a/nebo zrušit vaši záruku.

North America
All locations
+1.763.422.2661
Chat with us:
nvent.com/schroff

Europe
Straubenhardt, Germany
+49.7082.794.0
Betschdorf, France
+33.3.88.90.64.90
Warsaw, Poland
+48.22.209.98.35
Assago, Italy
+39.02.932.7141
Chat with us:
nvent.com/schroff

Asia
Shanghai, China
+86.21.2412.6943
Qingdao, China
+86.532.8771.6101
Singapore
+65.6768.5800
Shin-Yokohama, Japan
+81.45.476.0271
Chat with us:
nvent.com/schroff

Middle East & India
Dubai, United Arab Emirates
+971.4.378.1700
Bangalore, India
+91.80.6715.2001
Istanbul, Turkey
+90.216.250.7374
Chat with us:
nvent.com/schroff

Naše portfolio silných značek:

CADDY ERICO HOFFMAN ILSCO SCHROFF TRACHTE

©2026 nVent. All nVent marks and logos are owned or licensed by nVent Services GmbH or its affiliates. All other trademarks are the property of their respective owners. nVent reserves the right to change specifications without notice.

This document is system-generated.