We connect and protect

RatiopacPRO, Air Filter, 42 HP

KATALOGNUMMER

24571-326

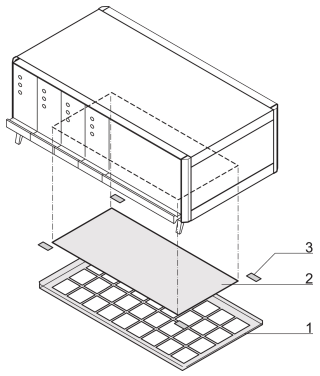

The air filter filters the intake air and reduces the quantity of dust or other particles.

CERTIFICERINGER

FUNKTIONER

Assembled without tools

Filter replacement without opening the case

IP protection class is maintained

PRODUKTEGENSKABER

Rack Width: 42HP

Finish: Struktur Pulvermaling

Materiale: Aluminium

Produktfamilie: RatiopacPRO AIR

Product Type: Filter

Type: Air Filter

Works With: Cases

Net Weight: 0.058kg

YDERLIGERE PRODUKTOPLYSNINGER

For optimized air flow plastic tip-up feet should be assembled on the case, please order the tip-up feet separately.

ADVARSEL

nVent-produkter skal kun installeres og anvendes som angivet i nVents produktvejledninger og træningsmaterialer. Vejledninger er tilgængelige på www.nvent.com og hos din nVent kundeservicerepræsentant. Forkert installation, misbrug, fejlanvendelse eller anden undladelse af fuldt ud at følge nVents instruktioner og advarsler kan medføre funktionsfejl, materielle skader, alvorlige personskader eller død og/eller ugyldiggøre din garanti.

North America
All locations
+1.763.422.2661
Chat with us:
nvent.com/schroff

Europe
Straubenhardt, Germany
+49.7082.794.0
Betschdorf, France
+33.3.88.90.64.90
Warsaw, Poland
+48.22.209.98.35
Assago, Italy
+39.02.932.7141
Chat with us:
nvent.com/schroff

Asia
Shanghai, China
+86.21.2412.6943
Qingdao, China
+86.532.8771.6101
Singapore
+65.6768.5800
Shin-Yokohama, Japan
+81.45.476.0271
Chat with us:
nvent.com/schroff

Middle East & India
Dubai, United Arab Emirates
+971.4.378.1700
Bangalore, India
+91.80.6715.2001
Istanbul, Turkey
+90.216.250.7374
Chat with us:
nvent.com/schroff

Vores kraftfulde portefølje af mærker:

CADDY ERICO HOFFMAN ILSCO SCHROFF TRACHTE

©2026 nVent. All nVent marks and logos are owned or licensed by nVent Services GmbH or its affiliates. All other trademarks are the property of their respective owners. nVent reserves the right to change specifications without notice.

This document is system-generated.