We connect and protect

□□□□ 2.5m SCHUKOSCHUKO/UTE □□□ IEC C13 □□□□□

Data Solutions

???

60103-131

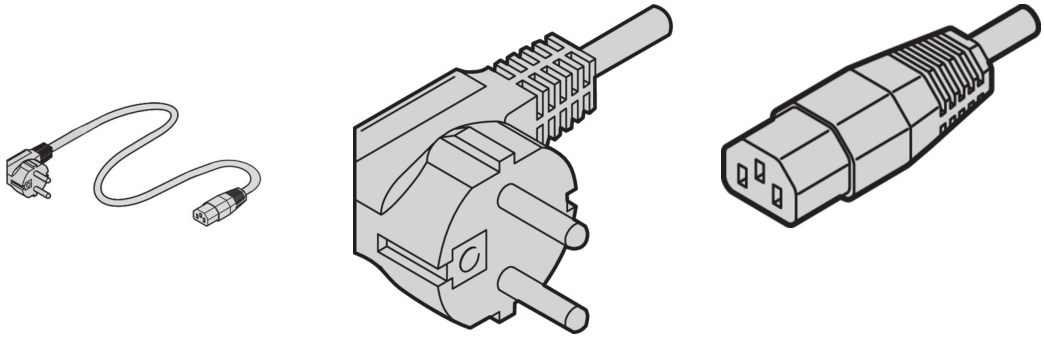

nVent SCHROFF ??? PC ?????????????

??

??

?????, ???, ?? PC ??, ????????

????

?????:	**SCHUKO / UTE**
?????:	**IEC C13**
??:	**2500mm**
????:	**1**
??:	**??**
?????:	**???**
??:	**PVC**
????:	**??**

Net Weight: 0.27kg

??

???? nVent ??????????????? nVent ??????? www.nvent.com ??????????? nVent ?????????????????????????? nVent ??????????????????????????????????????/??????????

?????????:

CADDY ERICO HOFFMAN ILSCO SCHROFF TRACHTE

©2026 nVent□□□ nVent □□□□□□□ nVent Services GmbH □□□□□□□□□□□□□□□□□□□□□□□□□□□□□□□□□□□□ nVent □□□□□□□□□□□□□□□□□□□□