We connect and protect

MTCA.0 □□□□□ 2 □ Single Full-Size AMC □□□ 1 HE

???

11850-023

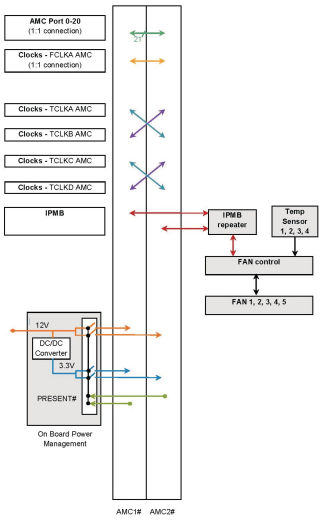

???? 2 ? AMC ?????????????????? AMC ?????????????????????? MCH?

??

??

??, ????????? 2? Single Full-Size AdvancedMC ???????? 2 HP ????, ???? 2 ? Single Mid-Size ??

?? AdvancedMC ??????????????????????????????????????? 10 Gbps

??????? 90 - 264 VAC ????, 150 W ??
12 VDC ??? AdvancedMC ?????????
? 55 °C ???????????? 150 W, ???????, ????????
????????????????
??????????????????

????

????: ??
???: 2
??: ????
????: ??????????
????: 40 GbE; PCIe Gen3
??????: 60W
??????: 100 – 240V
????: ????
????: 1U
????: ?????
????: ?
?? I/O: ?
??: PICMG MTCA.0 R2.0
??: 302mm
????: 1

??????

???????????

??????????????

??

???? nVent ????????????????? nVent ??????? www.nvent.com ??????????? nVent ??????????????????????????? nVent ???????????????????????????????????/??????????

North America
All locations
+1.763.422.2661
Chat with us:
nvent.com/schroff

Europe
Straubenhardt, Germany
+49.7082.794.0
Betschdorf, France
+33.3.88.90.64.90
Warsaw, Poland
+48.22.209.98.35
Assago, Italy
+39.02.932.7141
Chat with us:
nvent.com/schroff

Asia
Shanghai, China
+86.21.2412.6943
Qingdao, China
+86.532.8771.6101
Singapore
+65.6768.5800
Shin-Yokohama, Japan
+81.45.476.0271
Chat with us:
nvent.com/schroff

Middle East & India
Dubai, United Arab Emirates
+971.4.378.1700
Bangalore, India
+91.80.6715.2001
Istanbul, Turkey
+90.216.250.7374
Chat with us:
nvent.com/schroff

?????????:

CADDY ERICO HOFFMAN ILSCO SCHROFF TRACHTE

©2026 nVent□□□ nVent □□□□□□□ nVent Services GmbH □□□□□□□□□□□□□□□□□□□□□□□□□□□□□□□□□□ nVent □□□□□□□□□□□□□□□□□□

□□□□□□□□□□