We connect and protect

□□□□□□□□ Z □□□□ EN 60603-2 □ 40 HP

???

30822-045

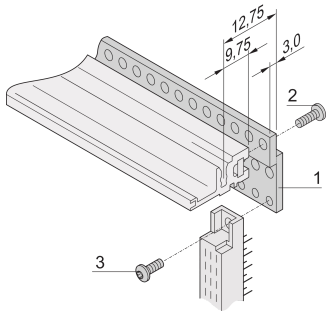

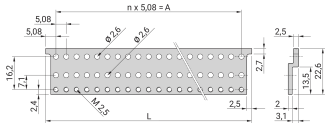

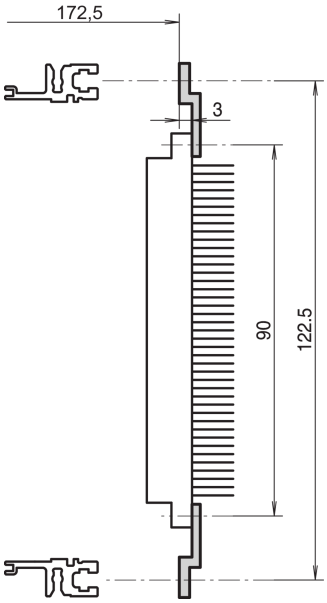

?????? Z ?????? EN 60603-2 (DIN 41612) ???

??

??

????, ????
Z ??????????????????????? ST ??, ??????, ????
????? EN 60603?2 (DIN 41612) ????

????

????: 40HP
????: 1
??: ????

??: 203.2mm	
??: ?	
????: EuropacPRO; RatiopacPRO; RatiopacPRO AIR; CompacPRO; PropacPRO	
????: Z ???	
??: ??; ???	

??????

? Z ??????????????????????????????????

??

???? nVent ???????????????? nVent ??????? www.nvent.com ??????????? nVent ?????????????????????????????? nVent ??????????????????????????????????????/??????????

North America
All locations
+1.763.422.2661
Chat with us:
nvent.com/schroff

Europe
Straubenhardt, Germany
+49.7082.794.0
Betschdorf, France
+33.3.88.90.64.90
Warsaw, Poland
+48.22.209.98.35
Assago, Italy
+39.02.932.7141
Chat with us:
nvent.com/schroff

Asia
Shanghai, China
+86.21.2412.6943
Qingdao, China
+86.532.8771.6101
Singapore
+65.6768.5800
Shin-Yokohama, Japan
+81.45.476.0271
Chat with us:
nvent.com/schroff

Middle East & India
Dubai, United Arab Emirates
+971.4.378.1700
Bangalore, India
+91.80.6715.2001
Istanbul, Turkey
+90.216.250.7374
Chat with us:
nvent.com/schroff

?????????:

CADDY ERICO HOFFMAN ILSCO SCHROFF TRACHTE

©2026 nVent□□□ nVent □□□□□□□ nVent Services GmbH □□□□□□□□□□□□□□□□□□□□□□□□□□□□□□□□□□□ nVent □□□□□□□□□□□□□□□□□□□□