We connect and protect

□□□□□□□ M6□ 50 □

Data Solutions

???

21100-003

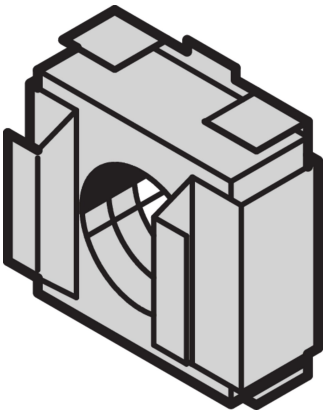

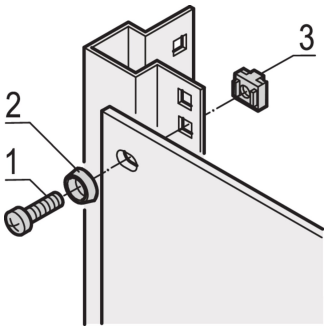

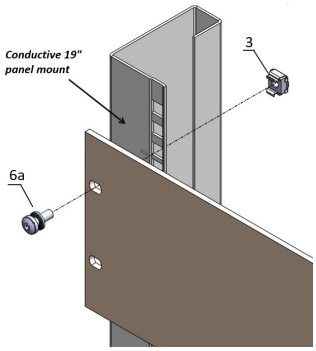

??

??

??

???? M4 ? M5 ???????

????????????????????????????

????

??: ??
????: 50
????: M6
??: ?
????: RatiopacPRO; RatiopacPRO AIR; CompacPRO; PropacPRO; Comptec; Inpac; MultipacPRO
????: ??
??: ????
??: ???; Eurorack; Novastar; Varistar; Varistar CP
Net Weight: 0.23kg

??

???? nVent ??????????????? nVent ??????? www.nvent.com ??????????? nVent ?????????????????????????? nVent ?????????????????????????????????????/??????????

©2026 nVent□□□ nVent □□□□□□□ nVent Services GmbH □□□□□□□